THIS COPY IS PROVIDED ON A RESTRICTED BASIS AND IS NOT TO BE USED IN ANY WAY DETRIMENTAL TO THE INTERESTS OF PANDUIT CORP.

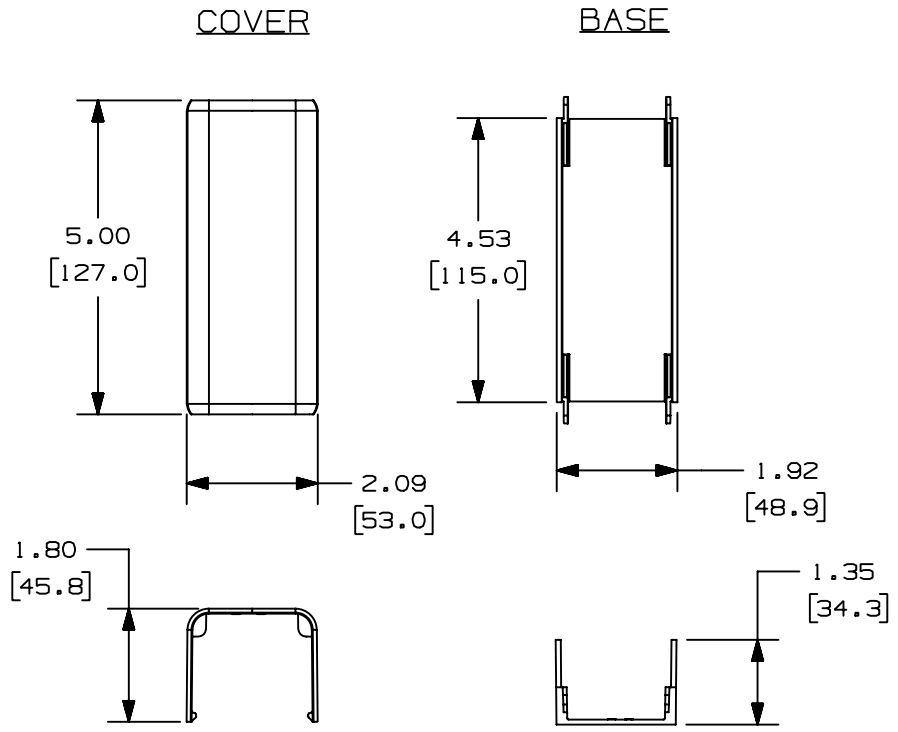

PANDUIT PART NO.	WEIGHT
OFR20LC	.172 lbs / EACH (77.85 g / EACH)

A

NOTES:
1. SEE CURRENT CATALOG FOR ADDITIONAL PART NUMBER SUFFIXES TO INDICATE COLOR AND/OR PACKAGE QUANTITY.
2. DIMENSIONS IN PARENTHESES ARE IN METRIC.

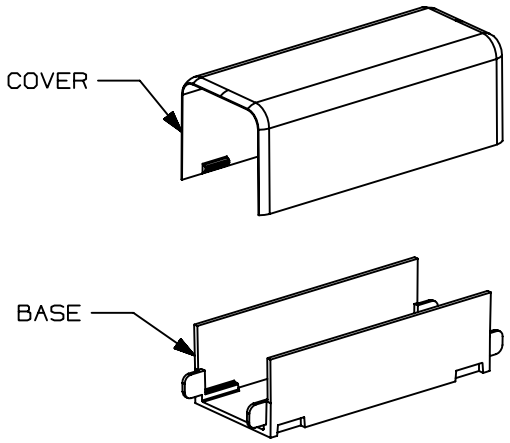

REV	DATE	BY	CHK	DESCRIPTION	ECN	CHK	CUST	SUP
----	-----	---	---	RELEASED TO PRODUCTION	------	---		
1	11-09-04	JHEP		A. UPDATED PART WEIGHT INFO	38874-03			
R	04-01-04	JBN	RMHI	DRAWING RELEASED				

CAD FILENAME/LAYERS: D38874BG_DC_OFR20LC_00B.PRT

PANDUIT CORP. TINLEY PARK, ILLINOIS

OFFICE FURNITURE LONG COUPLER FITTING (OFR20LC)
CUSTOMER DRAWING

UNLESS OTHERWISE SPECIFIED, DIMENSIONAL TOLERANCES ARE:
(.X) ± (.XXX) ±
(.XX) ± .03 [.8] ANGLES ±

UNLESS OTHERWISE SPECIFIED, ALL DIMENSIONS ARE GIVEN IN INCHES, THIRD ANGLE PROJECTION.

DRAWN BY: JBN
DATE: 04-01-04
CHK'D: RMHI
MAT'L: PVC
SCALE: NONE
DRAWING NO.: 38874-03
DWG SIZE: A